DS-3D501R-A
20KM Gigabit Fiber Receiver

DS-3D501R-A is a gigabit single-mode single-fiber fiber optical receiver developed by Hikvision. It provides one 10/100/1000 Mbps self-adaptive RJ45 port and one 1000 Mbps SC fiber optical port, and can achieve high-speed and lossless transmission of data signals over a maximum of 20 km transmission distance.

- Plug-and-play and fast forwarding, achieving high-speed, lossless, and up to 20 km transmission of data signals with no configuration required
- 4 kV lightning protection design with high reliability
- Quasi-industrial-grade design with an operating temperature range of -20 °C to 60 °C
- Wavelength division multiplexing and single-fiber data forwarding, saving cabling costs
- Solid and high-strength industrial-grade metal shell with stronger heat dissipation capability
- 1 x 10/100/1000 Mbps RJ45 port and 1 x 1000 Mbps SC fiber optical port

▪ Specification

General	
Shell	Metal
Net Weight	0.13 kg (0.28 lb)
Gross Weight	0.23 kg (0.51 lb)
Dimensions (W × H × D)	71.6 mm × 26.1 mm × 94.1 mm (2.81'' × 1.03'' × 3.70'')
Operating Temperature	-20 °C to 60 °C (-4 °F to 140 °F)
Storage Temperature	-40 °C to 85 °C (-40 °F to 185 °F)
Operating Humidity	5% to 95% (no condensation)
Relative Humidity	5% to 95% (no condensation)
Power Supply	5 V DC, 0.6 A
Max. Power Consumption	3 W
Power Consumption in Idle	1.5 W
Installation Mode	Desk-Mounted
Surge Protection	4 kV
Network Parameters	
Ports	1 x 10/100/1000 Mbps RJ45 port and 1 x 1000 Mbps SC fiber optical port
Switching Capacity	4 Gbps
Packet Forwarding Rate	2.98 Mpps
Optical Module Parameters	
Optical Interface	SC
Fiber Type	Single-mode bidirectional fiber
Transmission Distance	20 km
Wavelength	Tx1550 nm/Rx1310 nm
Transmit Power	-9 dBm~-3 dBm
Receiver Sensitivity	≤ -24 dB
Approval	
EMC	CE-EMC (EN 55032: 2015+A11: 2020, EN IEC 61000-3-2: 2019, EN 61000-3-3: 2013+A1: 2019, EN 50130-4: 2011+A1: 2014, EN 55035: 2017+A11: 2020)
Safety	CB (AMD1:2009, AMD2:2013, IEC 62368-1: 2014 (Second Edition))
Chemistry	Reach (Regulation (EC) No.1907/2006)

▪ Available Model

DS-3D501R-A

▪ Typical Application

Application 1: IPC Remotely Connected to Fiber Optical Transceiver (Transmitter)

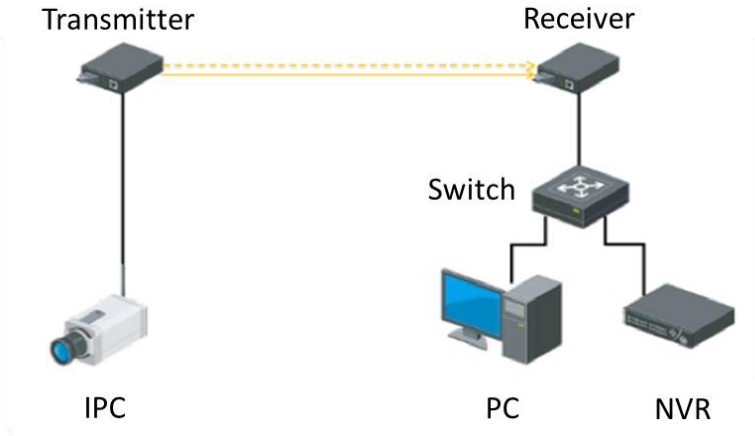

Application 2: IPCs Connected to Fiber Optical Transceiver (Transmitter) via a Switch

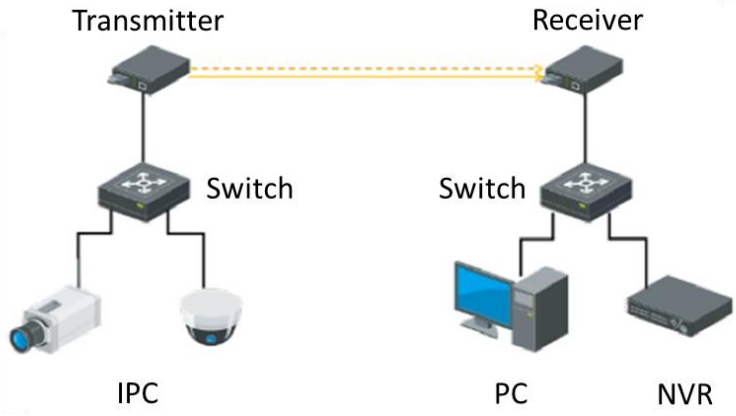

▪ Physical Interface

Front Panel

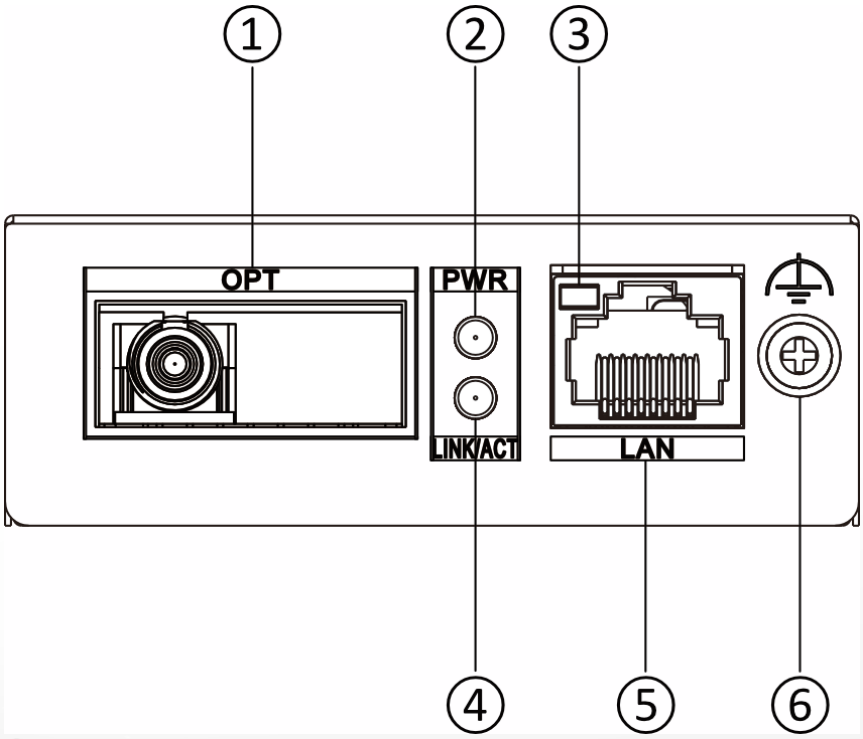

Rear Panel

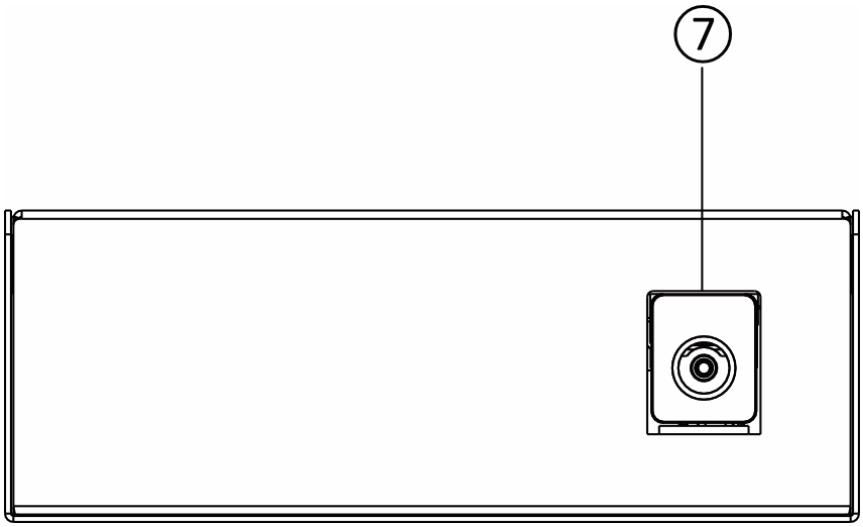

No.	Port/Indicator	Description
①	OPT	SC fiber optical port, connected to another fiber optical port via a single-mode optical fiber.
②	PWR	Power indicator. ● Solid on: The device is powered on normally. ● Unlit: No power supply connected or power supply is abnormal.
③	LINK/ACT	LAN port indicator. ● Solid on: The 10/100/1000 Mbps self-adaptive RJ45 port is connected. ● Flashing: The 10/100/1000 Mbps self-adaptive RJ45 port is transmitting or receiving data. ● Unlit: The 10/100/1000 Mbps self-adaptive RJ45 port is disconnected or connection is abnormal.
④	OPT LINK/ACT	Fiber optical port indicator. ● Solid on: The gigabit SC fiber optical port is connected via an optical fiber. ● Flashing: The gigabit SC fiber optical port is transmitting or receiving data. ● Unlit: The gigabit SC fiber optical port is disconnected or connection is abnormal.
⑤	LAN	10/100/1000 Mbps self-adaptive RJ45 port, used for connection to another device such as a network camera (IPC) or switch via a network cable.
⑥	Grounding Terminal	Used for connection to a grounding cable to protect the device from lightning.
⑦	PWR DC 5V	Power jack. Use the attached power adapter to connect the device's power jack to a power socket.

▪ Dimension

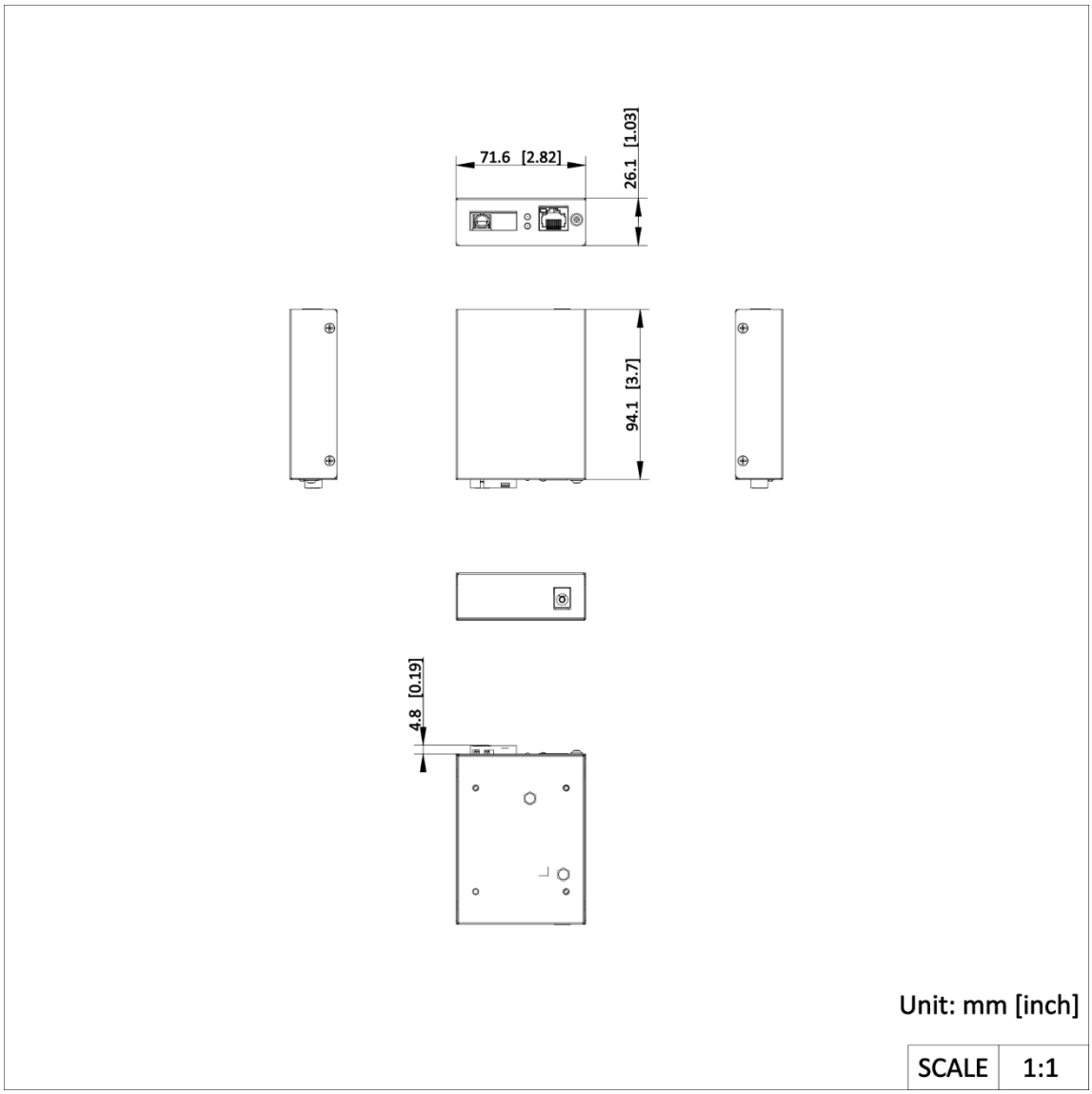

See Far, Go Further

www.hikvision.com
support@hikvision.com

© Hangzhou Hikvision Digital Technology Co., Ltd. Unless otherwise agreed, Hikvision makes no warranties, express or implied. We reserve the right to introduce modifications without notice.